THIS DOCUMENT IS THE PROPERTY OF BOSTON WHALER, INC. MFG. DEPT., EDGEWATER, FLORIDA. ALL RIGHTS ARE RESERVED. THIS DOCUMENT AND INFORMATION CONTAINED MUST NOT BE COPIED OR DISCLOSED TO OTHERS WITHOUT WRITTEN PERMISSION OF BOSTON WHALER, INC.

DWG. NO:	REV.	CURRENT ECD
1259753	G	050635

NOTES:

REVISIONS

REV.	DESCR.	BY	DATE	APPVD.	ECN NO.
G	MODIFY DRAWING BORDER TO AN ATTRIBUTED BORDER	TS	08/16/05	AVM	050635

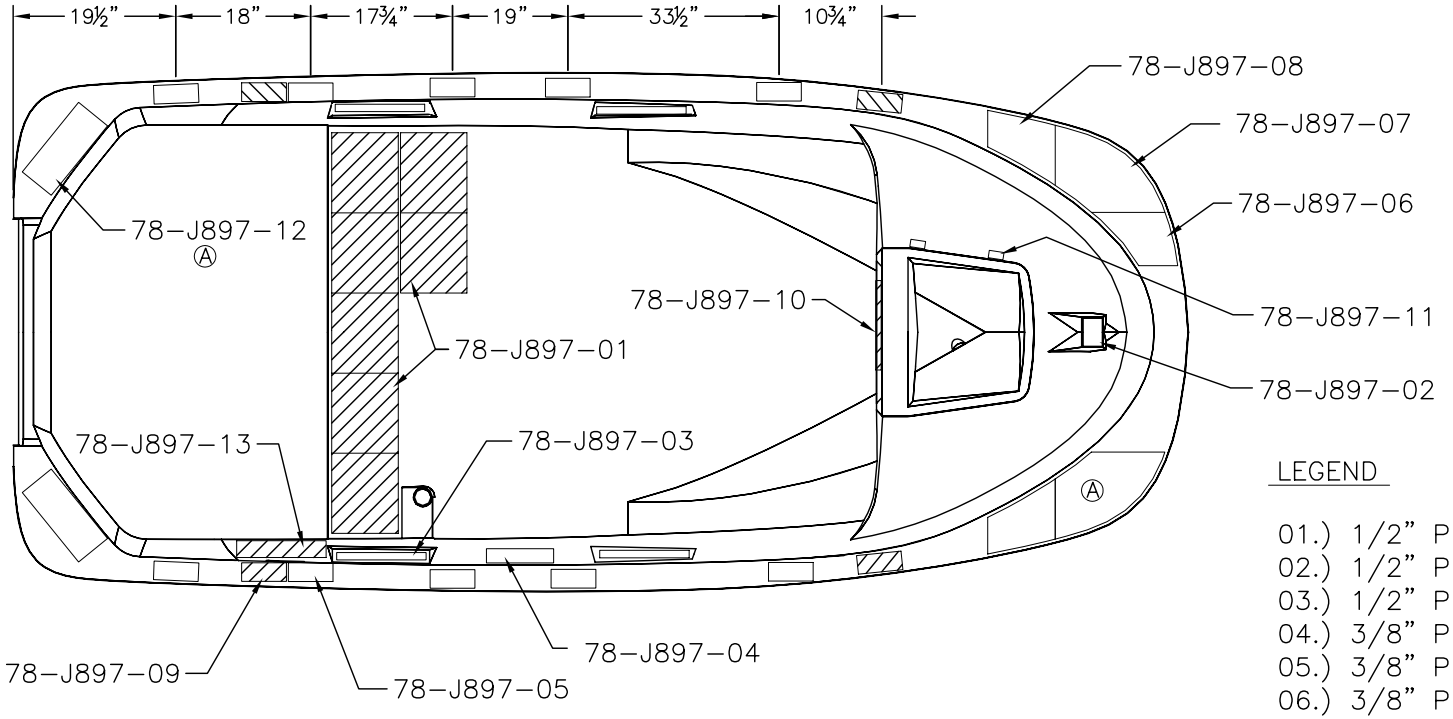

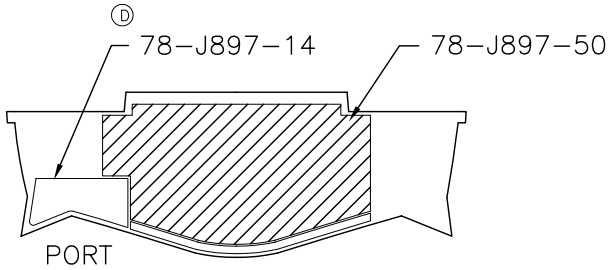

LEGEND

01.) 1/2" PLYWOOD (7) 9" X 10 3/4"
02.) 1/2" PHENOLIC (1) 3" X 3 3/4"
03.) 1/2" PHENOLIC (4) 1" X 12"
04.) 3/8" PHENOLIC (1) 7" X 10 1/2"
05.) 3/8" PHENOLIC (10) 3" X 6"
06.) 3/8" PHENOLIC (1) PER PATTERN
07.) 3/8" PHENOLIC (2) PER PATTERN
08.) 3/8" PHENOLIC (2) PER PATTERN
09.) 3/8" PLYWOOD (4) 2 1/4" X 8"
10.) 1/2" PLYWOOD (1) 5" X 12"
11.) 3/8" PHENOLIC (2) 1" X 2"
12.) 3/8" PHENOLIC (2) 5" X 12"
13.) 1/2" PLYWOOD (1) 10" X 12"

TRANSOM
14.) 1/2" PHENOLIC (1) PER PATTERN
50.) 1 1/2" PLYWOOD (1) PER PATTERN

INTERPRET DIMENSIONS AND TOLERANCES PER ANSI Y 14.5
UNLESS OTHERWISE SPECIFIED DIMENSIONS ARE IN INCHES.
TOLERANCES: ANGLES = ± .5° .XXX = ± .010
.X = ± .1 X/X = ± 1/16
.XX = ± .03
DO NOT SCALE DRAWING

BOSTON WHALER®
PRODUCT DEV. & MFG. ENGINEERING GROUP

CHECKED: J. MILLER	DATE: 07/14/99	DRAWN: T. CURTIS	DATE: 07/14/99	SCALE: NONE	BOAT MODEL / MOLD NO.
APPD: L. SCHOLZ	DATE: 07/14/99	DWG. TITLE: REINF LOCATION DIAGRAM 130 SPORT			
DESIGN: J. MILLER	DATE: 07/14/99				INIT. REL. ECN NO: R8008 / DWG. NO: 1259753 / SHT. NO. 1 OF 1
INT. ENG: J. MILLER	DATE: 07/14/99				